JOCELYN

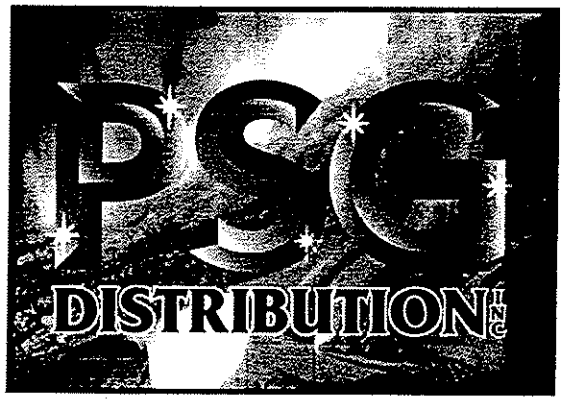

798, 8th Street East
La Guadeloupe (Québec)
G0M 1A0

Direct Line Technical Support
1-888-459-6458

Installation and Operating Instructions for

COBRA/LEGEND

Pellet Stoves

KEEP THESE INSTRUCTIONS

TABLE OF CONTENTS

DESCRIPTION OF MAIN COMPONENTS

Exhaust Blower (80 CFM)

The exhaust blower vents combustion gases to the outside. It starts up when the start button is depressed or when activated by the thermostat. It stops if the F-140 sensor temperature falls below 140°F (60°C) or if ignition does not occur within about 15 minutes.

Convection Blower (265 CFM)

The convection blower forces heated air into the room. It is controlled by the F-160 sensor. You can control the speed of the blower with a rheostat.

Auger Motor (1 RPM gear box)

This motor runs the auger, which feeds pellets into the stove. It is controlled by a 4-position rotary feed switch that regulates the pellet feed rate. Safety sensors (L-250 reset and L-250) and a vacuum sensor will cut power to the motor if they are activated.

Electronic Igniter

The igniter is located under the firepot. It is activated by the start button or the thermostat. The flame will ignite about 5 minutes later. If the F-140 sensor in the exhaust duct is not activated after about 15 minutes, the control panel will indicate that there is an error or that the stove is out of fuel.

Sensors

F-140 (exhaust blower)

Located in the exhaust system, the F-140 sensor controls the feed cycle when engaged. The exhaust blower remains on as long as the temperature is above 140°F (60°C). This allows the stove to vent gases and cool down. The blower is turned off when the F-140 sensor is not engaged (below 140°F). This

sensor also starts the convection blower (265 CFM) and the pellet feed cycle simultaneously.

F-160 (convection blower)

Located on the right side near the convection blower, the F-160 sensor bypasses the rheostat when engaged and increases the air flow rate to the maximum.

Safety Sensors

There are two safety sensors (L-250 reset and L-250) attached to the stove, one on the right side of the firebox near the convection blower, and the other on the outer wall of the auger cylinder. If either one is activated, whether by a convection blower failure or by overheating, then the auger stops immediately.

Vacuum Sensor

This is also a safety device. The vacuum sensor is integrated into the circuit board and is connected by a tube to the exhaust duct. It monitors the vacuum within the combustion zone. If the vacuum fails or if there is no air venting out, then it will stop feeding pellets into the stove.

Electronics

A circuit board controls all of the stove's functions. It regulates the pellet feed rate, the safety sensors, the ignition cycle and the timing of all functions. For more details, consult the "Control Panel" and "Wiring Diagram" pages.

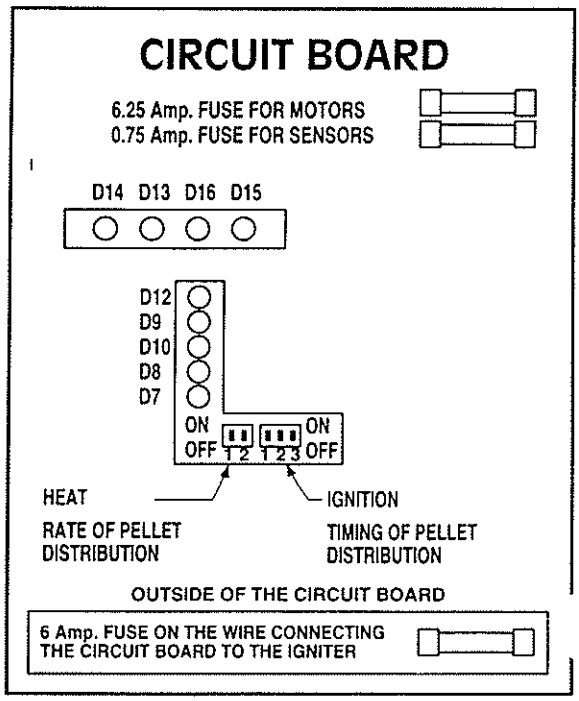

GENERAL INSTALLATION

Location

- For maximum performance, we recommend installing the stove in a large room as close as possible to the center of the house.
- Make sure that there is a grounded 110-volt outlet with a surge protector near the stove location.
- As a safety precaution, the stove must be the only appliance plugged into this outlet and the outlet must be on a circuit by itself.
- Make sure that there is a smoke detector near the stove. Install one if necessary.
- Provide an exhaust vent behind the stove (either directly through the wall or via an existing chimney).
- Do not install the stove in a bedroom.

Minimum Clearance (house or mobile home)

Minimum clearance requirements around the stove and the exhaust vent:

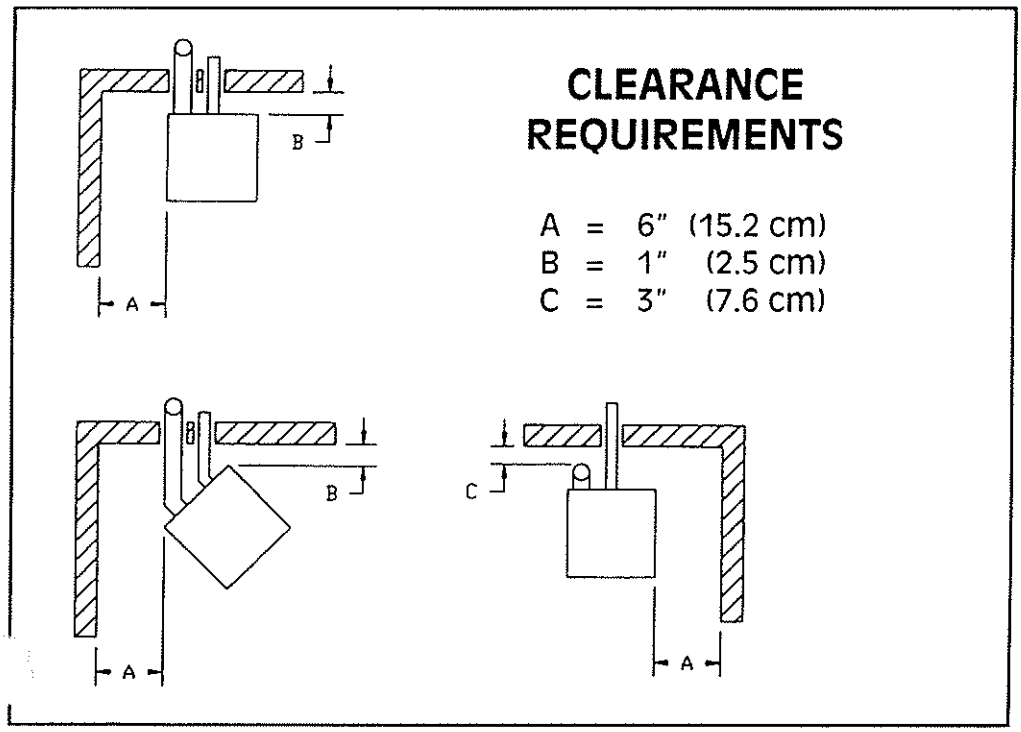

Exhaust Duct

- When installing ducts through combustible walls, consult the manufacturer to find out required clearance.
- We recommend attaching the stove to a prefabricated flue or a masonry chimney with a stainless steel flue or liner.
- The pipes must be approved for pellet stoves and be at least 3" in diameter (7.62 cm).
- All pipe joints must be sealed with high temperature silicon, such as "Kleen-Flo Hi-Temp Red no. 477" or an equivalent.
- A vertical "T" pipe is recommended at the back of the stove to make pipe maintenance easier.
- The exhaust vent must be located at least 36" (92 cm) from any opening such as a door, window, ventilator intake (Venmar), etc.
- We recommend a minimum of 84" (214 cm) between the exhaust vent and any parking lot or public way.
- Do not put the exhaust vent under a deck or patio (combustible or not) or in a carport.
- On the outside of the building, the exhaust vent must be located at least 48" (122 cm) from adjacent perpendicular walls.

Exhaust System

The firebox of the Legend and Cobra stoves functions by negative pressure. The exhaust blower (80 CFM) forces air out of the firebox, creating a vacuum which in turn draws air in through the intake. For optimal performance, exhaust gases must be vented through pipes that are free of any obstructions.

The majority of stoves are installed with several turns in the exhaust duct or with excessively long pipes. This type of installation reduces the volume of gas that can be vented (CFM).

You can calculate the diameter of the exhaust duct using the following chimney length equivalents (CLE) and adding them to your chimney length:

90° elbow or T-joint	add 5 feet
45° elbow	add 3 feet
Horizontal installation	add 1 foot
Vertical installation	add 1/2 foot

- If the total CLE is less than or equal to 15 feet, then 3" diameter pipes may be used.

  If the total CLE is greater than 15 feet, then 4" diameter pipes are required.

- At altitudes over 3,000 feet, if the total CLE is less than or equal to 7 feet, then 3" diameter pipes may be used. If the total CLE is greater than 7 feet, then 4" diameter pipes must be used.

The CLE chart is supplied as a reference only. We recommend consulting a professional installer of exhaust ducts to determine whether your arrangement is acceptable considering the conditions at the outside vent.

Air Intake Duct

- The air intake must be outside the house unless the stove is hooked up to a chimney with sufficient draw.

- Aluminum pipes (flexible or not) with thermal insulation are required.

- All joints must be sealed with high temperature silicon, such as "Kleen-Flo Hi-Temp Red no. 477" or an equivalent.

- The interior diameter of the pipes must never be less than 2-3/8" (6 cm).

  Do not hook up the stove's air intake with a ventilation intake (Venmar).

SAFETY PRECAUTIONS

The installation data and methods in this manual are provided for information only. The owner retains full responsibility for safe and functional installation. We recommend having your installation approved by a professional.

This stove MUST be properly installed according to the instructions. Consult your dealer for additional information.

If installing in a mobile home, the stove must be securely fastened to the floor (using nuts and bolts) and grounded.

This stove was designed to burn wood pellets only. Use no other fuel. The warranty will be void if any other fuel is used.

Never use gasoline or any other flammable liquid to ignite pellets in your stove. Use only approved firestarters, as recommended by your dealer.

This stove will not overheat under normal operating conditions. However, continuous operation at the maximum setting may cause electrical components to wear out prematurely. During Spring and Fall, a fuel control setting of 1 or 2 is recommended. For colder temperatures, use settings 3 and 4.

To avoid overheating and a possible fire hazard, exhaust temperatures must not exceed the 570°F (300°C) limit. For this reason the pellet feed mechanism (the auger motor) must be programmed by an authorized PSG Distribution technician. PSG Distribution Inc. declines all responsibility if this procedure is not followed.

A six-foot electrical cord is included with your stove. The electronic igniter requires 600 watts. Keep the cord away from hot surfaces.

OPERATING INSTRUCTIONS

Methods of Lighting the Stove

A. Manually with the electronic igniter

1. Fill hopper with pellets (1 bag).
2. Put a handful of pellets in the firepot to help prime the auger.
3. Turn the stove on and make sure the green light goes on.
4. Set the pellet feed rate (1, 2, 3 or 4).
5. Push the start button. The red "cycle" light and the yellow "auger" light will both come on. The auger will rotate continuously for a preset length of time. Then there will be a 2 minute pause while the igniter lights the flame. A sensor located in the exhaust duct starts the pellet feed cycle when the temperature reaches 140°F.
6. When the stove is in manual operation mode, it runs continuously according to the pellet feed rate. In order to stop combustion you must push the stop button. Then the red and yellow lights will go out.

B. Lighting manually without the electronic igniter

To be used if you choose to or if the igniter is not working.

1. Fill hopper with pellets (1 bag).
2. Put a handful of pellets in the firepot to help prime the auger.
3. Turn the stove on and make sure the green light goes on.
4. Add some firestarter in the center of the firepot. (Consult your dealer about recommended products for pellet stoves. **NEVER** use a flammable liquid or trash as firestarter.)
5. Light the firestarter and close the door.
6. Set the pellet feed rate (1, 2, 3 or 4).

7. Push the start button.

8. To stop combustion, push the stop button.

C. Lighting automatically by thermostat

Proceed as in "A" above, but do not push the start button. Ignition and shut off are automatic, based on the room temperature.

AUTO The fire will go out between heating cycles.

PILOT The stove will heat on low between heating cycles. The fire will not go out.

Note If you want to switch from manual to automatic (thermostat) mode:

- Push the stop button.
- Set the thermostat at the desired temperature.

D. Adjusting the air intake

An inside damper regulates the air intake to the firebox. It must be in open position to get a lively flame. Adjust down as needed if there is too much draw.

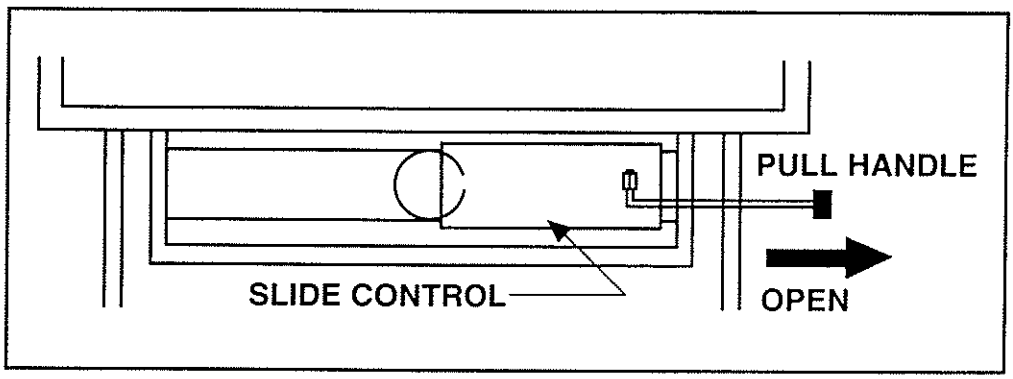

Fuel

This stove was designed to burn wood pellets only. Pellets must be free of dirt and other impurities.

The Association of Pellet Fuel Industries has set the following industry standards. There are two grades of pellets. The difference between them is the percentage of impurities.

Standard:	3%
Premium:	1% or less

Specifications:

Impurities	1% to 3%
Diameter	1/4" to 3/8"
Length	1-1/2" maximum
Density	40 lb. per cubic foot
Output	8,200 Btu per lb. (454 g)
Ash residue	1% maximum
Moisture content	8% maximum

The warranty will be void if the fuel used is not up to standards.

MAINTENANCE

Firepot

Check the firepot regularly for ash accumulation, especially on the electronic igniter. Cleaning every other day is recommended. Frequency depends on pellet quality. To clean, wait until the stove has cooled down.

Electronic Igniter

The electronic igniter is located in the bottom of the firepot. **It is very important to keep ashes from accumulating on the igniter, as this will make lighting the stove more and more difficult.**

Note: Take extra care not to hit the igniter. It contains a fragile ceramic part. Clean the top of the igniter without moving it.

Ash Pan

The ash pan is clamped underneath the firepot. Remove as needed and empty into a metal container. Ashes must be kept away from the stove and stored long enough for any embers to go completely out. Keep the ash pan tightly closed when the stove is operating.

Blowers

- Unplug stove and open both side panels.
- Apply high temperature oil at lubrication points. Two drops is adequate. Too much oil can damage the motor.
- Oil twice a year.

Ducts

Inspect and clean as needed every 50 bags (1 ton) of fuel.

Check to be sure all pipes are airtight.

Firebox

Wait until the stove has cooled down. Every 50 bags of fuel (1 ton), clean out the ashes. Unscrew and remove the stainless steel baffle at the back of the firebox and clean if needed.

Door Glass

The glass inside the decorative panels is slightly tinted "NEOCERAM", 5 mm thick.

TROUBLESHOOTING

Stove Isn't Working

- Make sure the stove is plugged into a 110-volt outlet.
- Make sure the thermostat is connected and working.
- Make sure there are pellets in the hopper.

Convection Blower Isn't Working

- Check by plugging it directly into the 110-volt outlet. If it doesn't work, replace it.

Auger Isn't Working

- The thermostat may have shut it off.
- The L-250 reset sensor, which is attached near the convection blower, may have registered too high a temperature. Push the sensor reset button to restart.
- The vacuum sensor tube may be defective (leaking), disconnected, or obstructed.
- The vacuum sensor may have failed to activate the auger because of a restriction where exhaust comes out of the stove.
- If the auger is jammed, check to see if there is an object obstructing it. Rotate manually to remove object.
- If the exhaust blower is not working, then the vacuum sensor has cut power to the auger.

The Igniter Doesn't Light the Pellets

- **There may be excessive ash accumulated on it. CLEAN WITHOUT REMOVING.**
- Pellet moisture content may be too high.
- The igniter may be defective and need replacing.

The Red Light Is Blinking Slowly

- The hopper may be out of pellets. Fill it and add a handful to the firepot to help prime the auger, then push the start button.
- Combustion may not have begun after the ignition cycle:
  - — Check the igniter.
  - — Remove accumulated ash and try again.

The Red Light Is Blinking Rapidly

- The vacuum sensor may have cut power to the auger because of a blockage in the exhaust system or an exhaust blower malfunction.
- The L-250 reset sensor, which is attached near the convection blower, may have registered too high a temperature. Push the sensor reset button to restart.

- The L-250 sensor near the auger cylinder may have been activated. This stops the auger, and combustion ceases until the L-250 sensor cools down. To restart the stove, push the start button once (to reset), and then once again if you are lighting manually. If you are using the thermostat, the stove will start automatically after you reset.

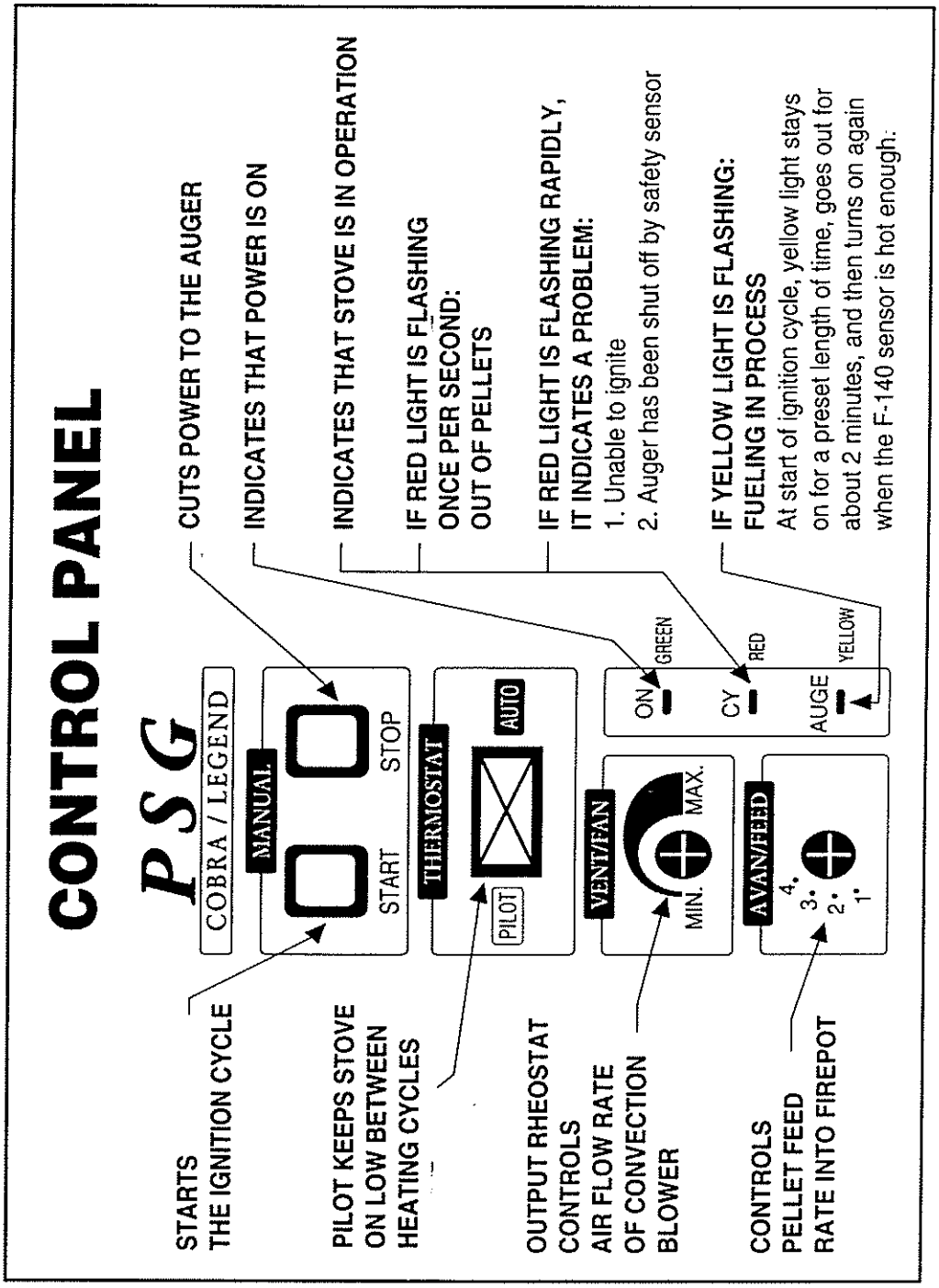

METHODS OF INSTALLATION

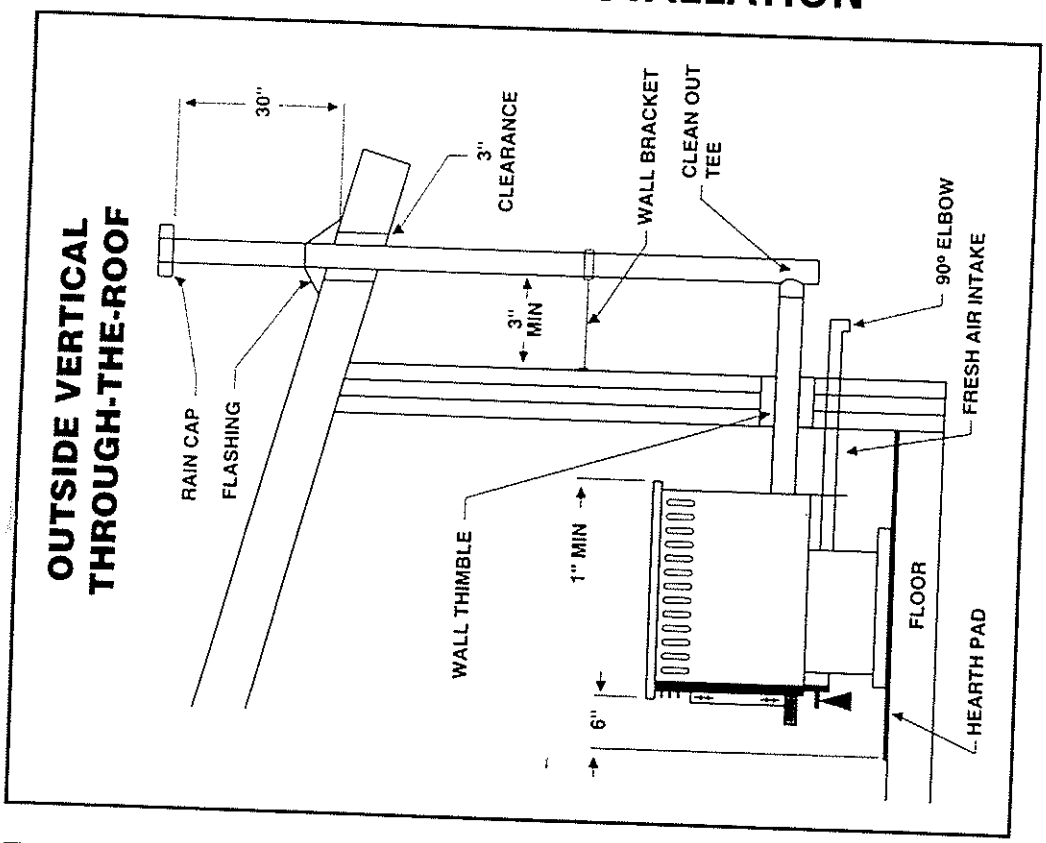

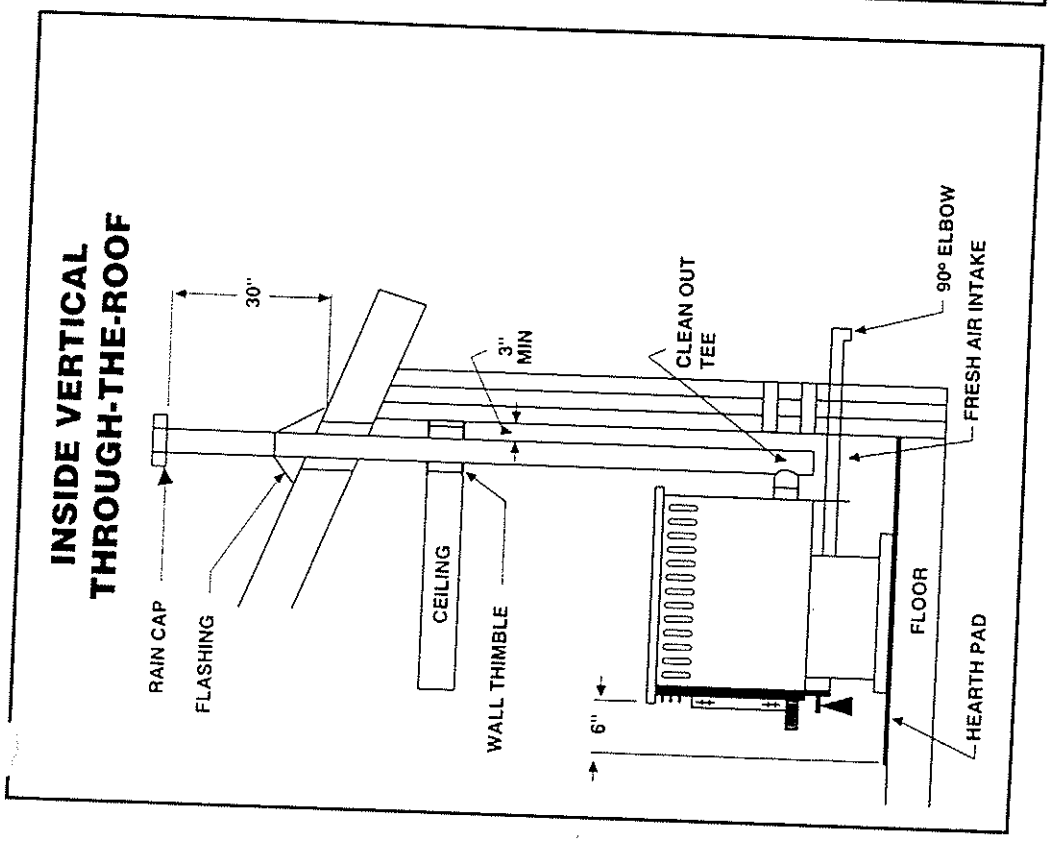

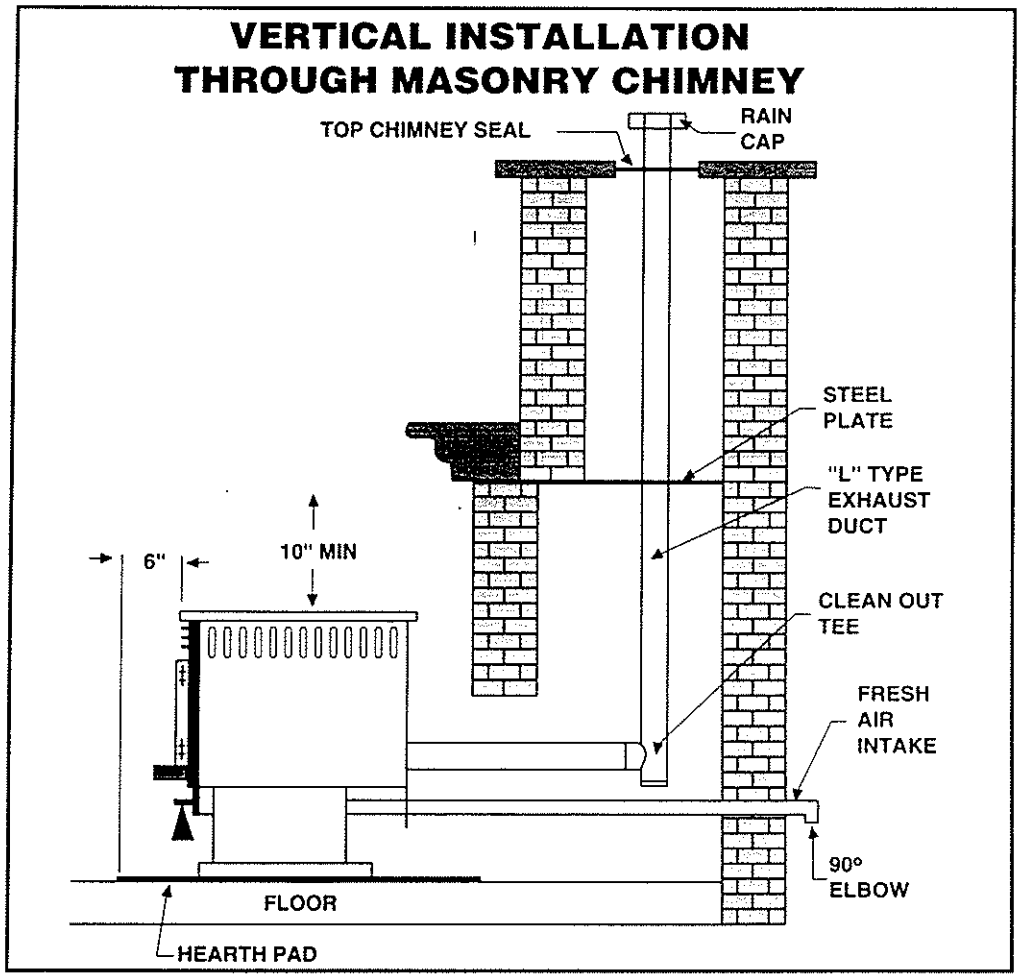
VERTICAL INSTALLATION
THROUGH MASONRY CHIMNEY
TOP CHIMNEY SEAL
RAIN CAP
STEEL PLATE
"L" TYPE EXHAUST DUCT
CLEAN OUT TEE
FRESH AIR INTAKE
90° ELBOW
6"
10" MIN
FLOOR
HEARTH PAD

WIRING DIAGRAM